Ultrahigh-speed High-sensitivity Color Camera

-Capturing phenomena in a flash

To enhance the attractiveness of programs such as live sports coverage, we have developed a prototype of a high-sensitivity, ultrahigh-speed color camera[1] that works under ordinary lighting yet is capable of capturing vivid images of objects moving too fast to be perceived by the human eye (Figure 1).

Most conventional high-speed imaging camera systems employ CMOS[2] imaging devices, which read out a signal charge by using the X-Y matrix switching method. This is because a CMOS is far more applicable to high-speed operation than an ordinary CCD[3] imaging device, which reads out a signal charge through a lengthy transfer path. However, CMOS devices suffer from more noise and inadequate sensitivity compared with a CCD device, requiring especially intense lighting for high-speed shooting with a short exposure time. This has made their application in broadcasts such as baseball night games impractical.

Figure 1: Appearance of ultrahigh-speed high-sensitivity color camera

Thus to overcome the problems of the conventional CMOS, we fabricated a memory within a CCD device for temporary image data storage, to make ultrahigh-speed operation feasible, and to achieve a higher sensitivity, we developed a CCD with a larger photodiode area.

The prototype ultrahigh-speed 3-CCD color camera can shoot at up to one million frames per second, attaining a sensitivity approximately ten times that of ultrahigh-speed cameras using CMOS technology.

Figure 2 shows the configuration of this camera system. Its controller consists of personal computers (PCs) that control individual RGB channels and a master PC that performs integrated management of the other PCs, as well as video data processing. To obtain a broadcasting-quality picture, the system treats data with signal processing, such as gamma and color balancing, and with video extension processing through pixel compensation.

In live coverage of indoor/outdoor sports, this camera shot at 1,000 frames per second during a professional baseball night game (Figure 3) and at 4,000 frames per second during a golf tournament. The clear slow-motion video clips, along with commentary, made a new style of video expression feasible.

In the future, we are going to improve the system's performance, such as the camera's resolution, by developing a new CCD with two to four times the number of pixels (presently 80,000 pixels (312×260)) and approximately 1.5 times the number of recording image frames (presently 103 frames).

[1]This camera was jointly developed with Kinki University, Shimadzu Corporation, and Hitachi Kokusai Electric Inc.

[2]Complementary Metal Oxide Semiconductor

[3]Charge Coupled Device

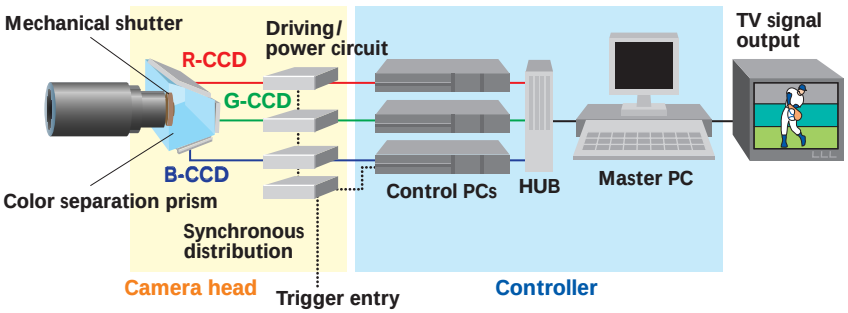

Figure 2: The camera's system configuration

Figure 3: Imaging example from a professional baseball night game (Frame rate: 1,000 frames/second)